rozvin
flat pattern
1:5

PŘEKLAD
13.12.2019
PROVEDLA
BRANDOVÁ EVA
Eva Brandová

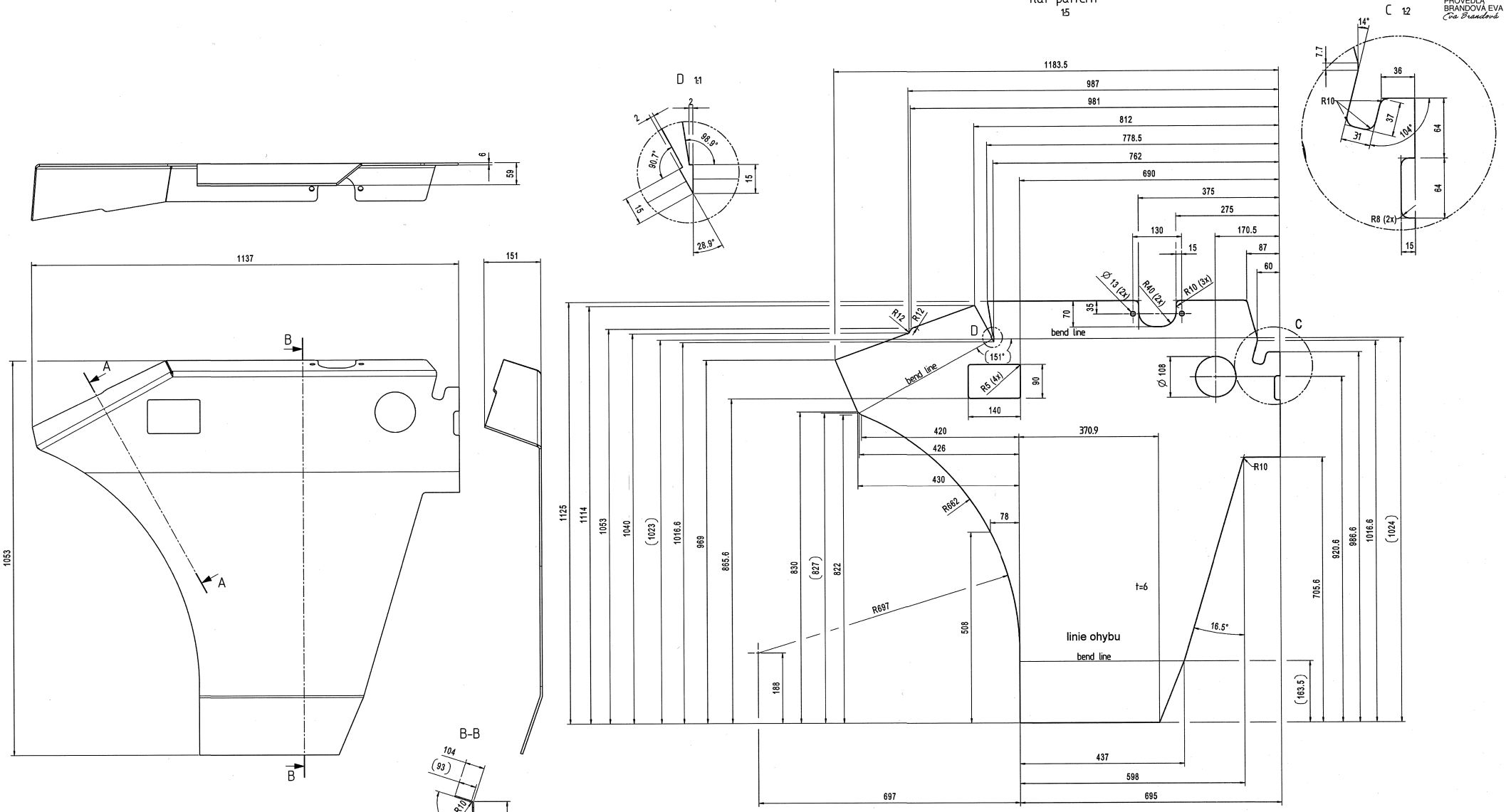


ZM/19/00778

1

ARCHIV
13.12.2019

ZM/19/00778

| | | | | | |
|---|---|---|---|---|---|
| First angle projection | 02 | CO to Prod | | T135533 | |
| General tolerance (GT) in mm Size range ≤ 30 / > 30 ≤ 120 / > 120 ≤ 400 / > 400 ≤ 1000 | Index | alteration | | Change no | Fit / Toler. |
| GT coarse | PPAP-Level 1 / WN 50020 | | Material: EN 10025 S275 JR | | Weight: in kg 35.98 |
| L 1 2 2 3 4 | Inspection dim. ⬭ Aux.dim. ( ) | | Blank no: | | |
| ◁ 1 2 4 6 | Drawn 06.11.2019 G.Selek | | Title: side panel Fuel Tank Main T5 | | Prod. |
| Lengths (L) and angle (⊥ ∠) = ±GT | Checked 06.11.2019 K.Posser | | | | Scale 1:5 |
| Tolerance Symbols ISO 1101 | Auth'd | | | | 1:2 |
| ○ roundness =1/2a-Tol. | M.check. | | | | |
| ⏥ straightness/flatness = GT | | | Drawing number / / 14015713615 | | Sheet: 1 of: 1 |
| ◎ concentricity/run out = GT | | | | | |
| ⌯ symmetry = GT | | | | | |
| // parallelism = GT | | | | | |
| ⌖ position = GT | | | | | |
| Languages: EN | Confidential document Refer to protection notice ISO 16016 | | Repl. | Orig. | |
| | | | Checked 6 | 3447065/D2D/001/02 | A1 |

Všechny chybějící rozměry-viz.3D soubor.
Non-dimensioned details according to 3D-Data

| outline length WN 10535 | | |
|---|---|---|
| outer | 4221.6 | mm |
| inner | 954.1 | mm |

Tolerances for section to DIN 6930 Part 2 accuracy grade m

| Condition at time of delivery | |
|---|---|
| de-scaled (degree of purity SA 2 1/2 acc. ISO 8501-1) | x |
| without burrs acc. WN 11310 | x |
| Permissible top-end rounding during flame cutting (also positive bead acc. WN 10572) | – |
| oil-free / free of grease | x |
| oiled | – |
| oiling permissable | – |
| Indicate the required condition at time of delivery with an X. | |

14015713615V02EN001